

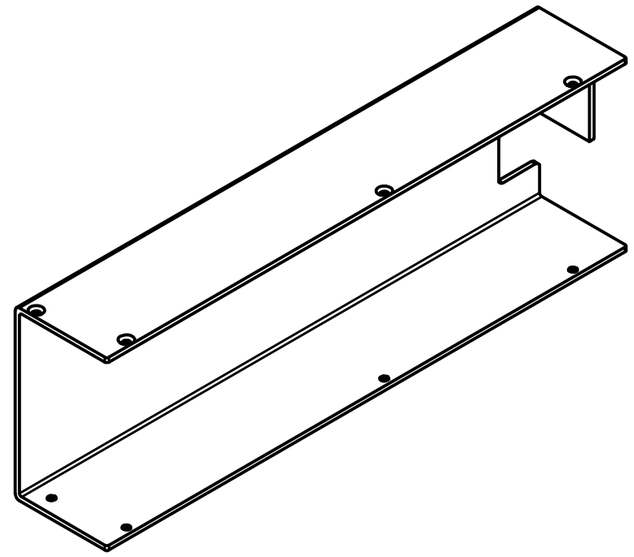

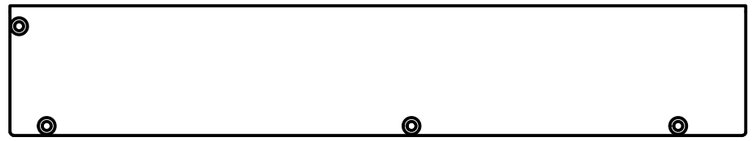

PARTS LIST			
ITEM	QTY	PART NUMBER	DESCRIPTION
1	1	CT100002850 Cover	non flammable, transparent material

DESIGNED BY	CHECKED BY	APPROVED BY	DATE		DATE	
zechnerf					22.09.2020	

CT100002850 Cover	ISSUE	SHEET 1 / 1